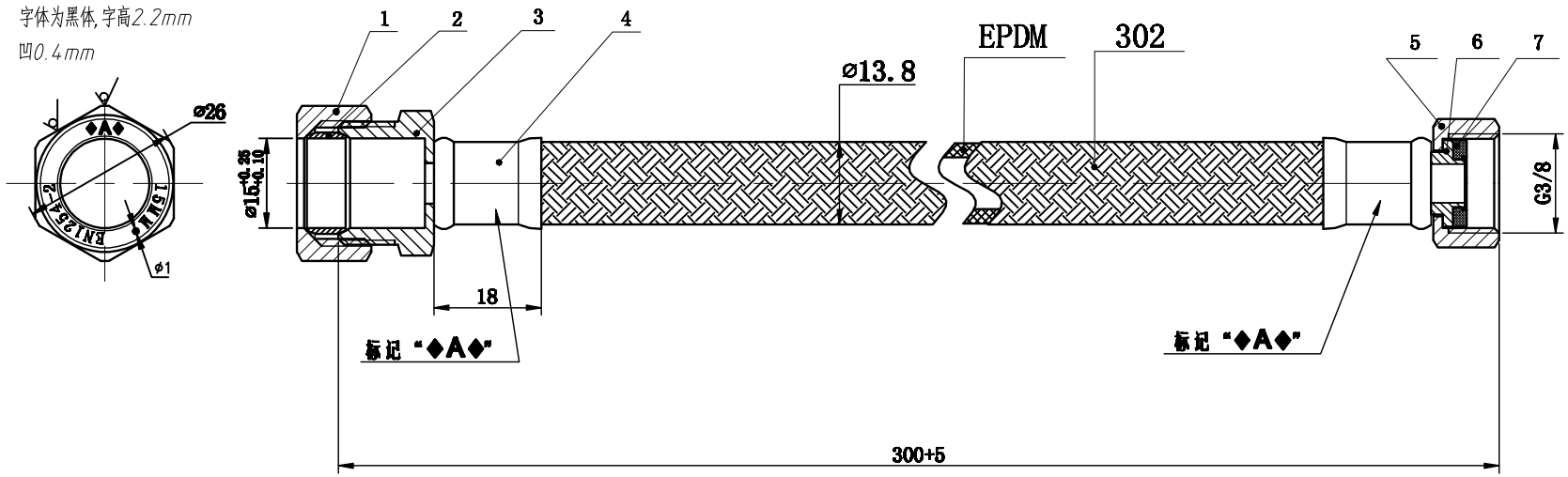

NO.	parts NO.	parts name	material	number	note
8					
7		Washer	EPDM	1	
6		Brass core	Brass	1	
5		Flat nut	Brass	1	Nickel plating
4		Stainless steel sleeve	SS302	2	
3		Male thread adapter	Brass	1	Nickel plating
2		Olive	H65	1	
1		Comperssion Nut	Brass	1	Nickel plating

Specification
Fields of applications: water
Maximum working pressure: 1.0MPa
Working temperature: 0-85°C

Mrk	Modification	Date

Drawn :
Checked:
Appr. :
Tolerances unless otherwise specified:
ISO 2768-mk

Title
15Cx3/8Fx30CM Flex Tap Con

Projection
Scale 1:1
Size A4
Material:
Weight

IDC BEIJING

NO. :
Client NO. : MFLEXTC150330E
Sheet 1/1
REV. 01